JAQUITH INDUSTRIES, INC.
Syracuse, New York 13205 (315) 478-5700 FAX: (315) 478-5707 www.jaquith.com

Extension
L-868 Class 1A
multiple section light base

L-868 Class 1A Extension

1. Approved and Certified to FAA Advisory Circular AC150/5345-42F L868 class 1A
   Size: A=8", B=12", C=15"
   A=10" / AC150/5345-42C

2. Extension galvanized to ASTM-A123/A123M-02

3. (12) 3/8"-16 equally spaced, tapped holes are aligned with bottom holes

4. (6) 7/16" Ø equally spaced, thru holes

5. Customer I.D. marks optional

6. H = height required, 2" minimum.

7. Extensions are shipped with:
   (6) 3/8"-16 x 1" SS Bolts (10650198)
   (6) 3/8", 2 piece locking washers (10680607)

8a. 8" Extension top holes are located at 30°, 60°, 120°, 150°, 210°, 240°, 300° & 330°.

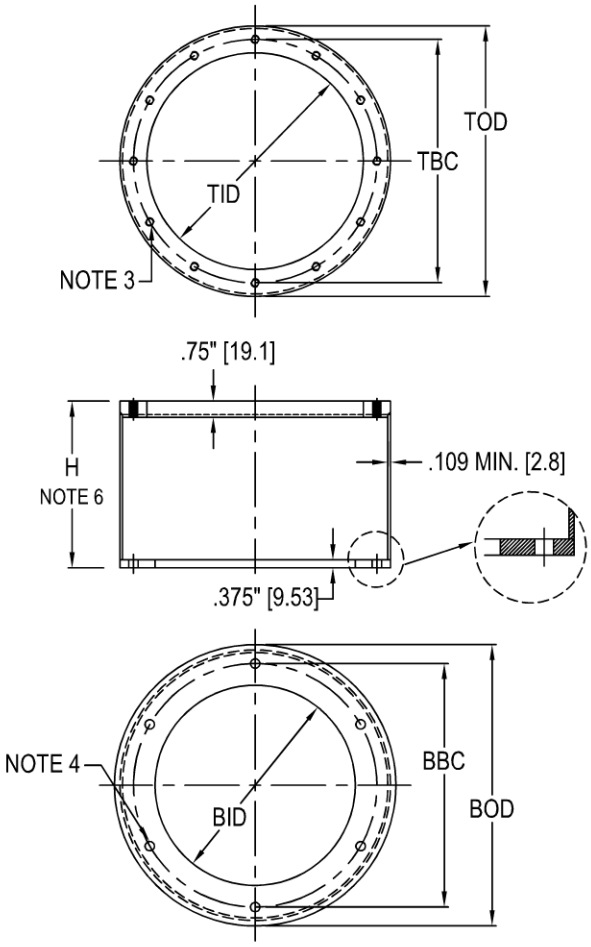

TYPE	PART NO.	TOD & BOD	TBC	BBC	TID	BID
AE0829X 8" L868A	**AX0_ _ _ _**	8.5"	7.25"	7.25"	6.5"	6.5"
		[215.9]	[184.2]	[184.2]	[165.1]	[165.1]
AE1529X 10" L868 See Note 1	**AX1_ _ _ _**	10.5"	9.25"	9.25"	8"	6"
		[266.7]	[235]	[235]	[203.2]	[152.4]
AE2419X 12" L868B	**AX2_ _ _ _**	12.5"	11.25"	11.25"	10"	10"
		[317.5]	[285.8]	[285.8]	[254]	[254]
AE3519X 15" L868C	**AX3_ _ _ _**	15.5"	14.25"	14.25"	13"	12.375"
		[393.7]	[362]	[362]	[330.2]	[314.3]

[ ] = dimensions in metrics; mm.

D-05f (rev 2)