JAQUITH INDUSTRIES, INC.
Syracuse, New York 13205 (315) 478-5700 FAX: (315) 478-5707 www.jaquith.com

L-868 Class 1A Spacer Ring

Bottom / Middle / Top Sections

Size B Spacer Ring shown with double bolt pattern

1. Approved and Certified to FAA Advisory Circular AC150/5345-42F L868 class 1A
   Size: B=12", C=15"

2. Spacer Rings made to Class 1A :
   Galvanized to ASTM-A123/A123M-02

3a. (6) 7/16" Ø equally spaced, thru holes
3b. (6) 7/16" Ø equally spaced, partial holes

4. Available in 1/16" increments
   5/16" min. to 2" max.

5. Spacers above 1/4" thickness are shipped with:
   (6) 3/8"-16 x (Ring Thickness + 1 1/8") Min.
   SS hex head cap screws
   (6) 3/8", 2 piece locking washers
   (JI Pt. No. 10680607)

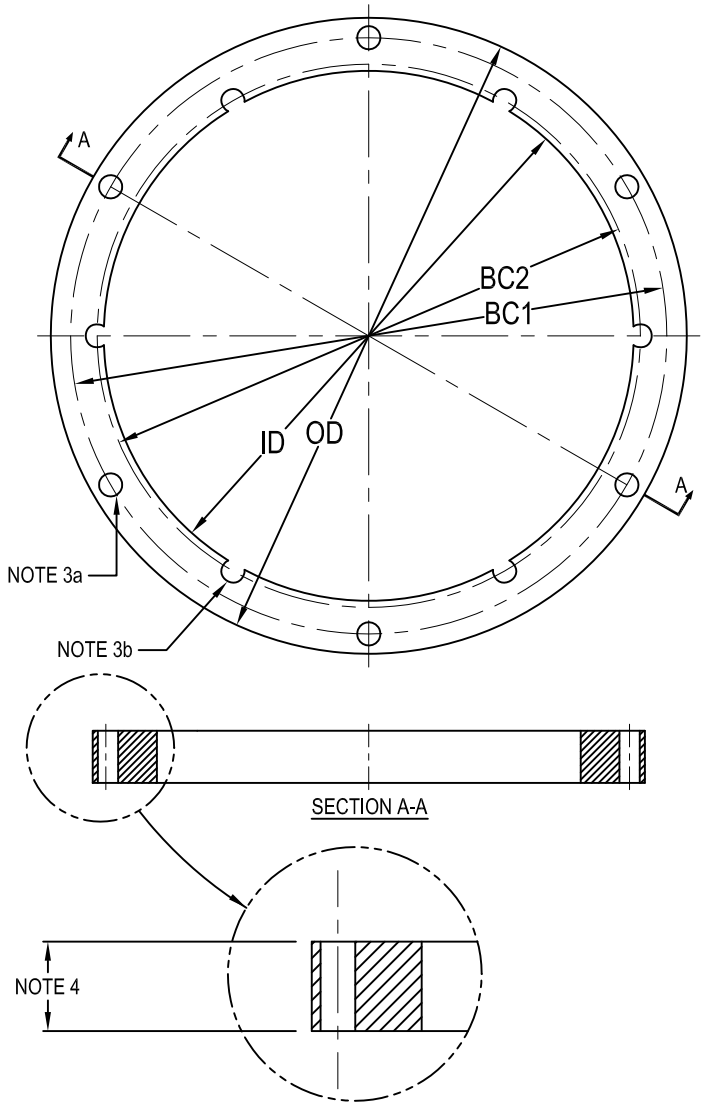

TYPE	OD	ID	BC1	BC2
AR5422_ _	12"	10"	11.25"	10.25"
12" L868B	[305]	[254]	[285.8]	[260.4]
AR5522_ _	15"	13"	14.25"	13.25"
15" L868C	[381]	[330.2]	[362]	[336.5]

[ ] = dimensions in metrics; mm.

E-03f (rev1)